NX-HT130

PA horn speaker

AT A GLANCE

30 W

70–100 V

PA horn

PA horn speaker for installed audio applications.

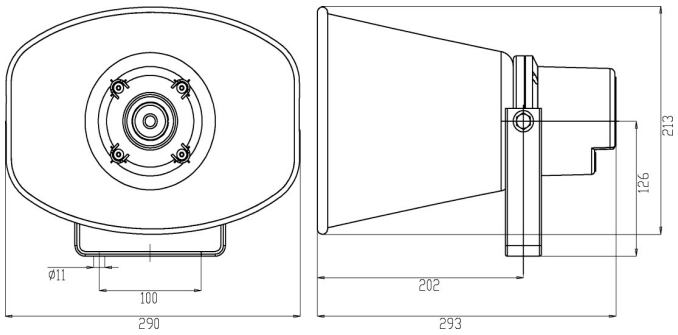

Original dimensional drawing; no separate product photograph.

TECHNICAL SPECIFICATIONS

Rated power	15 / 30 W
Frequency response	400 Hz–8 kHz
Line voltage	70–100 V
Sensitivity	95 dB
Dimensions (source order)	285 x 205 x 280 mm
Material	ABS
Connections	Black: COM; White: 30 W; Green: 15 W

No IP rating is specified. Illustration is the original dimensional drawing.